Specification For Approval

Customer	
Product Name	Wire Wound Molded SMD Power Inductors
Customer P/N:	
Cjiang P/N:	FXLA0650 Series

[■New Released, □ Revised] SPEC No.:

REMARK:		
Customer Approval Feedback		

●深圳市长江微电科技有限公司

SZ CJIANG TECHNOLOGY CO.,LTD

ADD: 11F, International Science and Technology Building, Fuhong Road, Futian District, Shenzhen

Factory ADD:No. shanyang RD CJIANG Industrial Park HUAi'AN Section HUAI'AN City Jiangsu Province

TEL: 0755-82529562 FAX:0755-83977004

http://www.CJING.COM.CN

E-mail: BOND@Cjiang.com.cn; ann@cjiang.com.cn

Version change history					
Rev	Date	Description	APPROVED	CHECKED	DRAWN
1.0	2022/8/9	文件制定	Bond	Charles	王云燕
2.0	2023/12/27	更改规范	Bond	Charles	王云燕

Caution :

All products listed in this specification are developed, designed and intended for use in general electronics equipment. The products are not designed or Warranted to meet the requirements of the applications listed below, whose performance and/or quality require especially high reliability, or whose failure, malfunction or trouble might directly cause damage to society, person, or property. Please understand that we are not responsible for any damage or liability caused by use of the products in any of the applications below. Please contact us for more details if you intend to use our products in the following applications.

1. Aircraft equipment.
2. Aerospace equipment.
3. Undersea equipment.
4. nuclear control equipment.
5. military equipment.
6. Power plant equipment.
7. Medical equipment.
8. Transportation equipment (automobiles, trains, ships,etc.)
9. Traffic signal equipment.
10. Disaster prevention / crime prevention equipment.
11. Data-processing equipment.
12. Applications of similar complexity or with reliability requirements comparable to the applications listed in the above.

FXLA0650 Series

RoHS compliant

introduction

- ROHS，Halogen Free and REACH compliance
- High rated current
- 125℃ maximum total temperature operation
- 7.3×6.8×5.0mm maximum surface mount package
- Low core loss
- Ultra low buzz noise due to molding construction

Applications

- Laptops and PCs
- Switch and servers
- Base stations
- DC/DC converters
- Battery powered devices
- SSD modules

Product Identification

FXLA	0650	-6R8	M
①	②	③	④

① FXLA ---------- Series name
② 0650 ---------- Dimension
③ 6R8 ---------- Inductance Value (6R8 = 6.8μH)
④ M ----------Inductance Tolerance (M= ± 20%)

Dimensions (unit:mm)

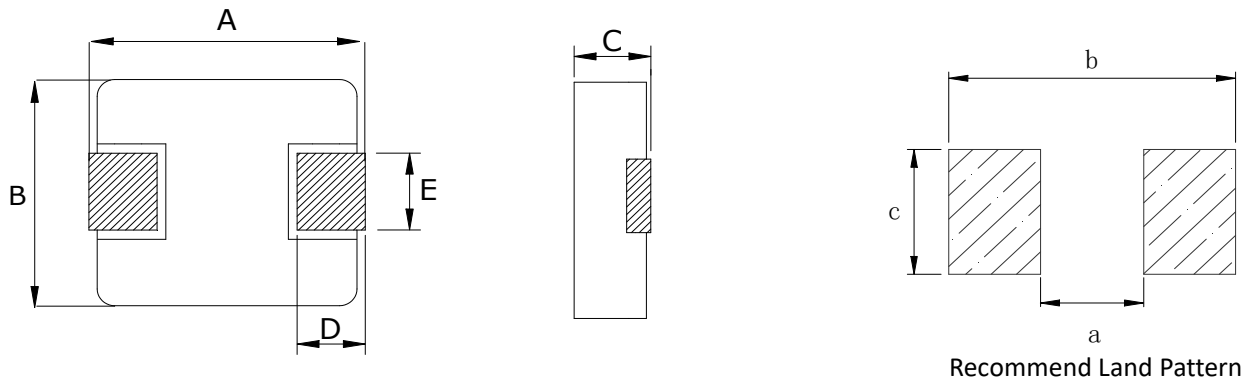

Recommend Land Pattern

A	B	C	D	E	a typ	b typ	c typ
7.0±0.3	6.6±0.2	4.8±0.2	1.6±0.3	3.0±0.3	3.7	8.4	3.5

Marking

The inductor is marked with a 3-digit code

Nominal Inductance	
Example	Nominal Value
1R0	1.0 μH
100	10 μH
101	100 μH

Note：Using Ink for marking

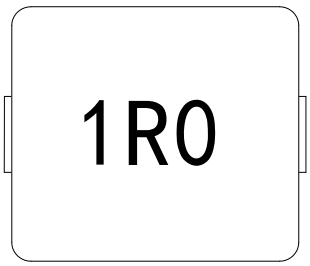

Structure and Components

Symbol	Components	Material
a	MARKING	Ink (black)
b	CORE	Alloy Sponge Powder
c	WIRE	Polyurethane copper wire
d	Terminal	Copper plated with Sn

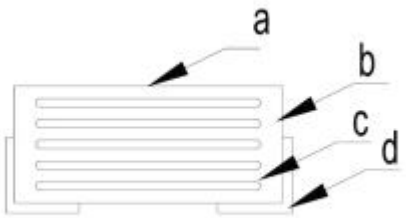

Part No.	Inductance	DC Resistance	Saturation Current	Saturation Current	Heating Rating Current	Heating Rating Current
	L0 (μH)	DCR (mΩ)	Isat (A)	Isat (A)	Irms (A)	Irms (A)
	±20 %, 100 kHz, 1V	MAX.	MAX	TYP.	MAX	TYP.
FXLA0650-R47M	0.47	3.9	16.8	21	17.0	20
FXLA0650-R68M	0.68	4.5	14.4	18	14.5	16.5
FXLA0650-1R0M	1.0	6.6	12.8	16	10	12
FXLA0650-1R5M	1.5	10	10.4	13	8.2	9.5
FXLA0650-2R2M	2.2	12.5	8.8	11	8.0	9
FXLA0650-3R3M	3.3	22	8.0	10	7.6	8.5
FXLA0650-4R7M	4.7	29	6.4	8	5	6
FXLA0650-6R8M	6.8	41	5.04	6.3	4	5.8
FXLA0650-8R2M	8.2	48	4.4	5.5	4.8	5.5
FXLA0650-100M	10	60	4.24	5.3	3.8	4.5
FXLA0650-150M	15	90	3.2	4	2.6	3.1
FXLA0650-220M	22	140	2.8	3.5	2	2.6
FXLA0650-330M	33	190	2.4	3.0	1.8	2.3
FXLA0650-470M	47	230	2.08	2.6	1.5	2

Notes

1. All test data is referenced to 25 °C ambient
2. Operating temperature range - 55 °C to + 125 °C
3. Isat (A) MAX: DC current at which the inductance drops approximately 30% from its value without current.
4. Irms (typ):DC current that causes the temperature rise(AT = 40 C) form 25°C ambient
5. Irms (Max):DC current that causes thetemperature rise(AT = 20°C)form 25°C ambient
6. The part temperature (ambient + temp rise) should not exceed 125°C under worst case operating conditions
. Circuit design, component placement, PWB trace size and thickness, airflow and other cooling provisions,all affect the part temperature. Part temperature should be verified in the end application.
7. For FXLA series inductors,absolute maximum voltage: DC 30V.

Mechanical Reliability		
Item	Specification and Requirement	Test Method
Solderability	1. No case deformation or change in apperarance 2. New solder coverage More than 95%	1.Preheat：155℃±5℃ ，60S±2S 2.Tin: lead-free. 3.Temperature:240℃±5℃，flux 3.0S±0.5S.
Mechanical shock	1. No case deformation or change in apperarance 2. △L/Lo≦±10%	1. Acceleration： 100G 2. Pulse time:：6ms 3. 3 times in each positive and negative direction of 3 mutual perpendicular directions
Mechanical vibration	1. No case deformation or change in apperarance 2. △L/Lo≦±10%	1. Reflow: 2times 2. Frequency: 10HZ～55HZ～10HZ，20 Min/Cycles 3. Amplitude: 1.52 mm 4. Directions: X,Y,Z 5. Time: 12 cycle / direction
Endurance Reliability		
Item	Specification and Requirement	Test Method
Thermal Shock	Inductance change: Within ± 10% Without distinct damage in appearance	1. First -55℃ for 30 minutes，last 125℃ for 30 minutes as 1 cycle. Go through 1000 cycles. 2. Max transfer time is 3 minutes. 3. Measured at room temperature after placing for 24±2 hours
Humidity Resistance	Inductance change: Within ± 10% Without distinct damage in appearance	1.Reflow 2 times, 2.85℃,85%RH,1000 hours 3.Measured at room temperature after placing for 24±2 hours
Low temperature storage	Inductance change: Within ± 10% Without distinct damage in appearance	1. Temperature：-55 ± 2℃ 2. Time：1000 hours 3. Measured at room temperature after placing for 24±2 hours
High temperature storage	Inductance change: Within ± 10% Without distinct damage in appearance	1. Temperature：+125 ± 2℃ 2. Time：1000 hours 3. Measured at room temperature after placing for 24±2 hours

Recommended Soldering Technologies

(1)Re-flowing Profile

Preheat condition: 150 ~200℃/60~180sec.

Allowed time above 217℃: 80~120sec.

Max temp: 260℃

Max time at max temp: 10 sec.

Solder paste: Sn/3.0Ag/0.5Cu

Allowed Reflow time: 2x max

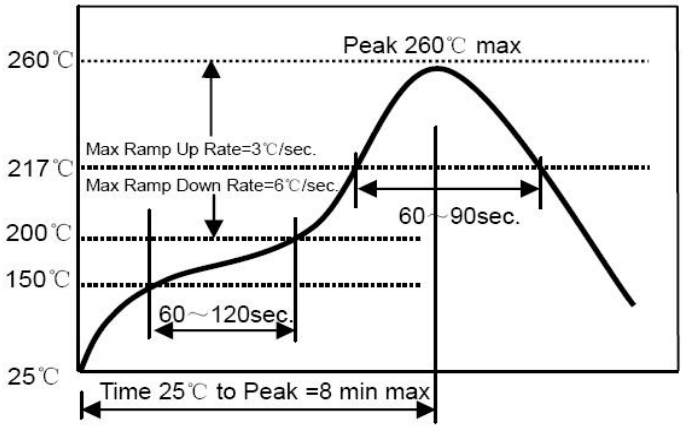

(2)Iron Soldering Profile

Iron soldering power: Max. 30W

Pre-heating: 150℃/60sec.

Soldering Tip temperature: 350℃ Max.

Soldering time: 3sec. Max.

Solder paste: Sn/3.0Ag/0.5Cu

Max.1 times for iron soldering

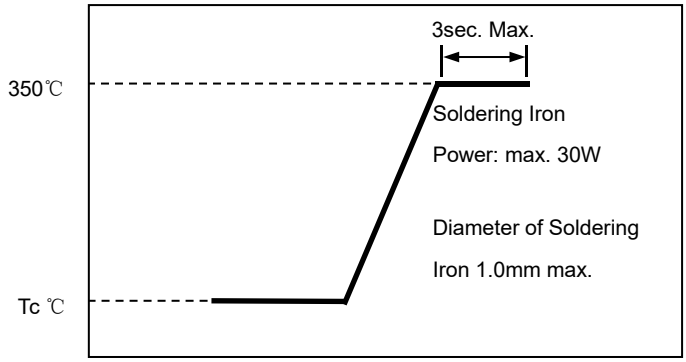

Packaging Information

(1) Tape Packaging Dimensions（Unit：mm）

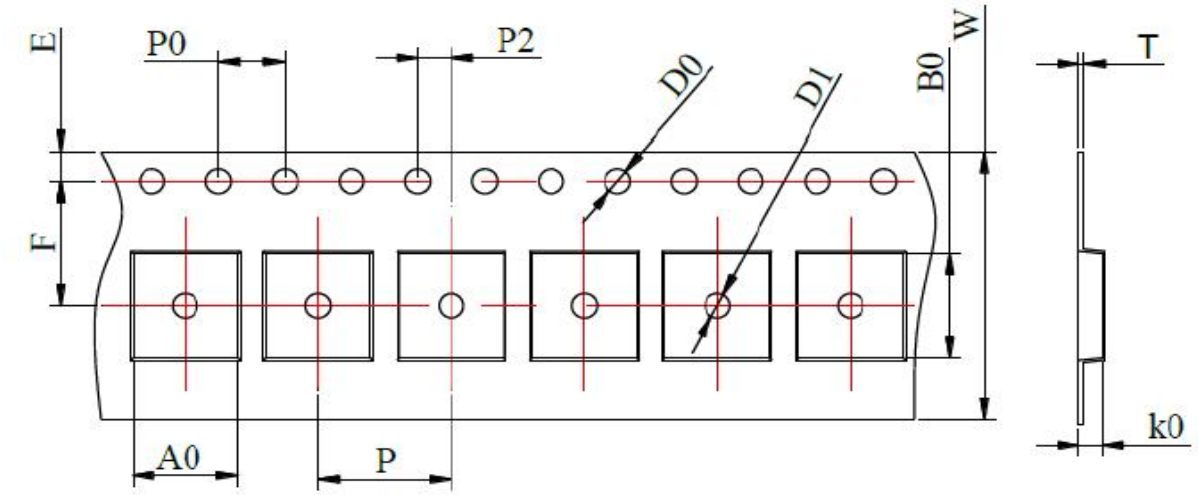

Type	Tape dimensions (mm)											
	W	P	P0	P2	D0	D1	T	A0	B0	K0	E	F
FXLA0650	16 ±0.3	12 ±0.1	4 ±0.1	2 ±0.1	1.5 ±0.1	1.5 ±0.1	0.4 ±0.05	6.9 ±0.1	7.5 ±0.1	5.4 ±0.1	1.75 ±0.1	7.5 ±0.1

Taping Drawings (UNIT:mm)

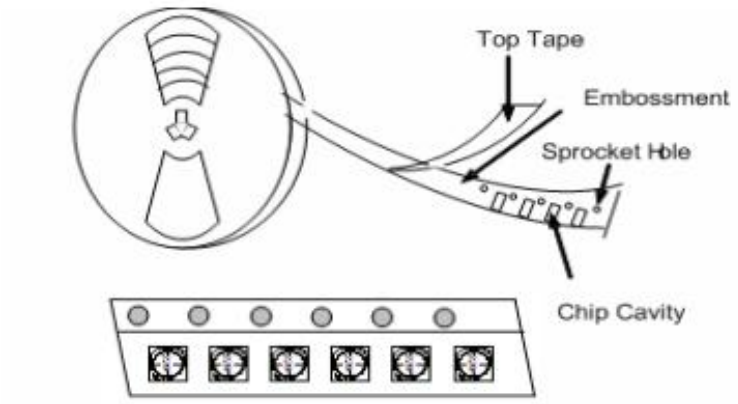

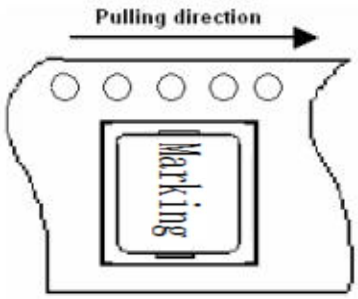

(2) Reel Dimensions（Unit：mm）

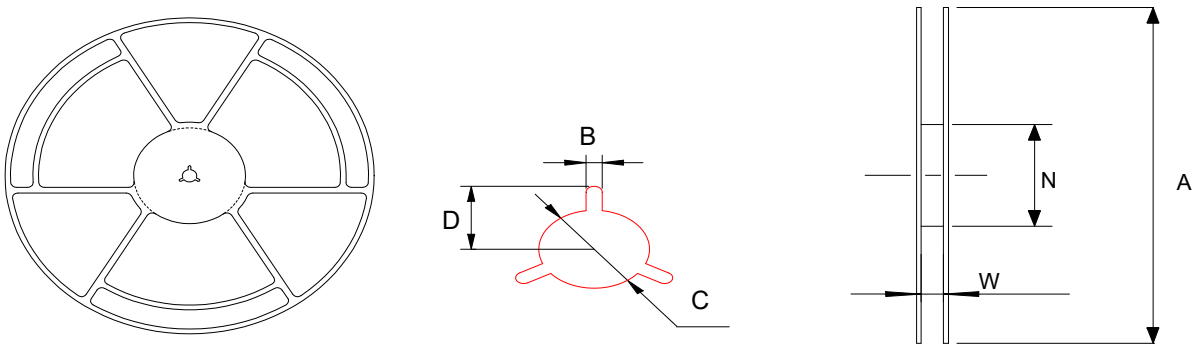

A	W	N	B	C	D
330+2.0	16.8+0.2	97+0.5	2.2+0.5	13.2±0.2	10.75±0.25

(3) Packaging Quantity(PCS)

Type	Standard Quantity		
	Reel	Inner box	Carton box
FXLA0650	1000pcs / reel	3Reel / box (3000 pcs)	3 Middle boxes, (9000 pcs)

(4) Peel force of top cover tape

The peel speed shall be about 300mm/minute

The peel force of top cover tape shall be between 0.1 to 1.3 N

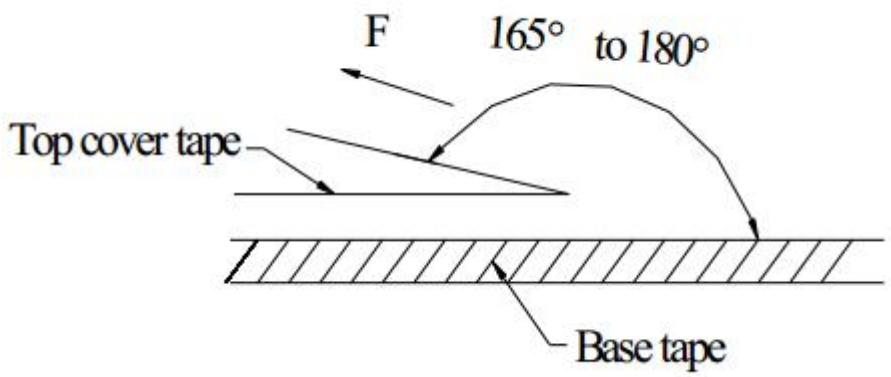

(5) Reel Label

Label on the reel

- Customer's part Number
- Lot Number
- Quantity
- date code

Shipping Label

- Customer's part Number
- Manufacturer's part Number
- Quantity
- date code

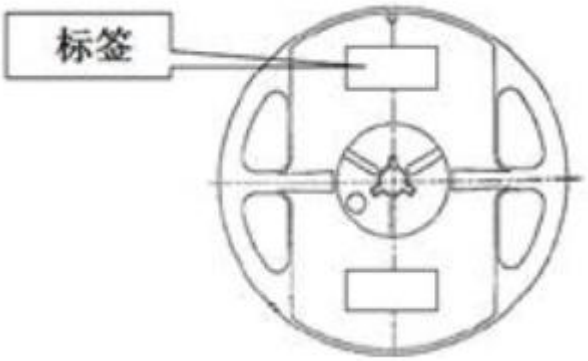

(6) Inner Box

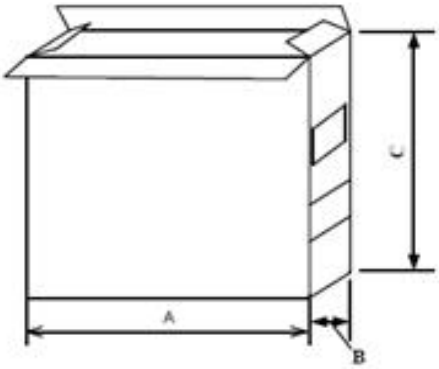

Packaging type	A(mm)	B(mm)	B(mm)
inner box	354	335	86

(7) Carton

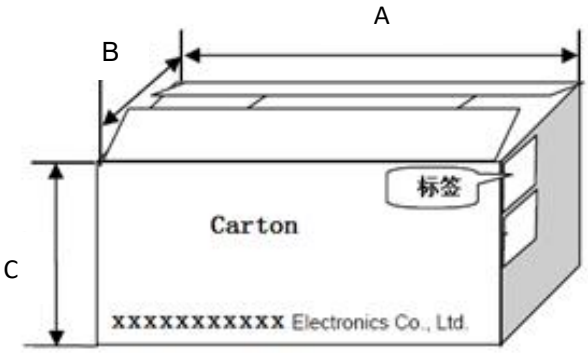

Packaging type	A(mm)	B(mm)	B(mm)
type	370	365	285