SPECIFICATIONS

Product Name	**Wire Wound Chip Common Mode Choke Coil**
Part Number	**FACT3225 Series**
Rev.	**1/0**

【ROHS, Halogen-Free and SVHC Compliant Parts】

Approved By	Checked By	Issued By
HUANG ZHI SHENG	GAO YUE	JI MENG KE

●深圳市长江微电科技有限公司

SZ CJIANG TECHNOLOGY CO.,LTD

ADD： 11F, International Science and Technology Building, Fuhong Road, Futian District, Shenzhen

Factory ADD:No. shanyang RD CJIANG Industrial Park HUAi'AN Section HUAI'AN City Jiangsu Province

TEL: 0755-82529562 FAX:0755-83977004

http://www.CJING.COM.CN

E-mail: BOND@Cjiang.com.cn； ann@cjiang.com.cn

Caution :

All products listed in this specification are developed, designed and intended for use in general electronics equipment. The products are not designed or Warranted to meet the requirements of the applications listed below, whose performance and/or quality require especially high reliability, or whose failure, malfunction or trouble might directly cause damage to society, person, or property. Please understand that we are not responsible for any damage or liability caused by use of the products in any of the applications below. Please contact us for more details if you intend to use our products in the following applications.

1. Aircraft equipment.
2. Aerospace equipment.
3. Undersea equipment.
4. nuclear control equipment.
5. military equipment.
6. Power plant equipment.
7. Medical equipment.
8. Traffic signal equipment.
9. Disaster prevention / crime prevention equipment.
10. Data-processing equipment.
11. Applications of similar complexity or with reliability requirements comparable to the applications listed in the above.
12. This series of products of our company apply to regular use in general automotive electronics and in-car electronics.

Not applicable to components related to driving safety of automobiles.

The company does not guarantee the applicability or performance of this series related to equipment failures during the operation of automobiles — including but not limited to brake failure, driving failure, poor operation, and other failures that may cause damage to the lives, bodies, or property of human, as well as applications that may have significant social impact (hereinafter referred to as "specific uses").

1. Features

1）High common mode impedance at high frequency effects excellent noise suppression performance.

2）FACT3225 series realizes small size and low profile 3.2*2.5*2.3 mm.

3）100% Lead（Pb）& Halogen-Free and RoHS compliant.

4）AEC-Q200 verified.

2. Applications

Common mode noise filtering for automotive CAN-BUS and signal line.

3. Product Identification

FACT	3225-	-110	-2P	T
①	②	③	④	⑤

① Series name

② Dimension

③ 11UH

④ 2 lines

⑤ Packing（Tape & Reel）

4. Dimensions （ unit:mm ）

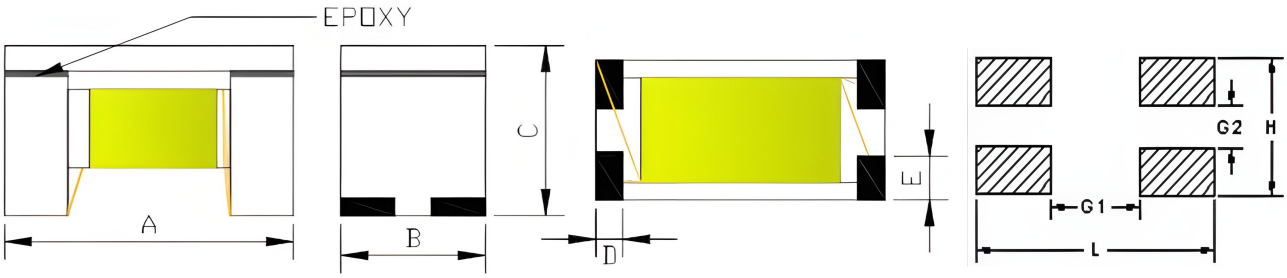

Recommend Land Pattern

A	B	C	D	E	L	H	G1	G2
3.20±0.20	2.50±0.20	2.30±0.20	0.70TYP	0.90TYP	3.7	2.5	2.0	0.6

5. Structure and Components

No	Part Name	Material Name
①	Lid	Ni-Zn Ferrite
②	Epoxy	Epoxy resin
③	Wire	Enameled copper wire
④	Core	Ni-Zn Ferrite
⑤	Electrode structure	Ag+Ni+Sn plating

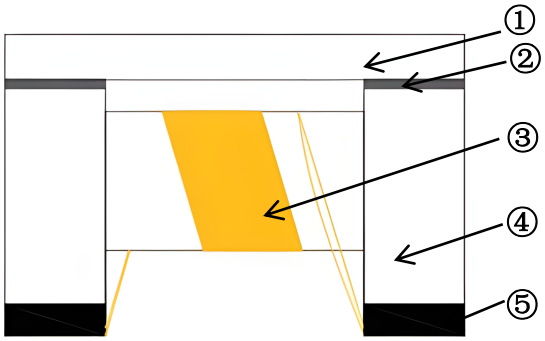

6. Chematic Diagram

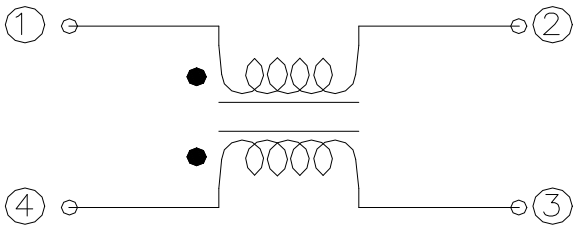

7. MEASURING CIRCUITS 2 LINE

1）Common mode：

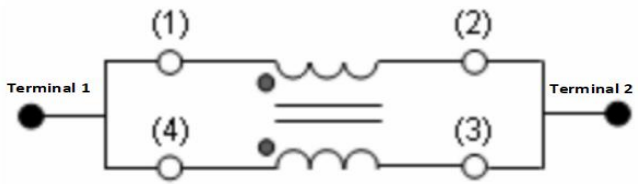

2）Differential mode：

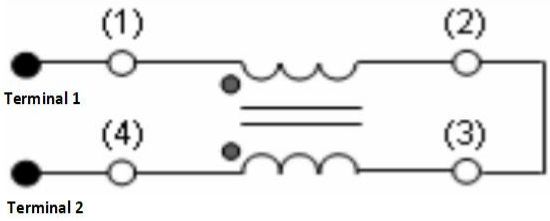

8.Electrical Characteristics

Cjiang P/N：	Inductance @100KHZ/0.1V	Common mode Impedance @10MHZ		DCR （1 line）	IR	Rated Current （Vdc）	Irms
	uH	Ω		mΩ	MΩ	V	mA
	+50%/-30%	MIN	TYP	MAX	MIN	MAX	MAX
FACT3225-110-2P-T	11	300	550	300	10	50	400
FACT3225-220-2P-T	22	500	1100	500	10	50	300
FACT3225-510-2P-T	51	1000	2600	700	10	50	200
FACT3225-101-2P-T	100	2200	5100	1500	10	50	150

Notes

1. All test data is referenced to 25 °C ambient.
2. Operating temperature range - 40 °C to + 125°C（Including self - temperature rise）.
3. Irms (A):DC current (A) that will cause an approximate ΔT of 40 °C(reference ambient temperature is 25 °C).
4. The part temperature (ambient + temp rise) should not exceed 125 °C under worst case operating conditions. Circuit design, component placement, PWB trace size and thickness, airflow and other cooling provisions all affect the part temperature. Part temperature should be verified in the end application.

9. FACT3225 Typical impedance vs. frequency

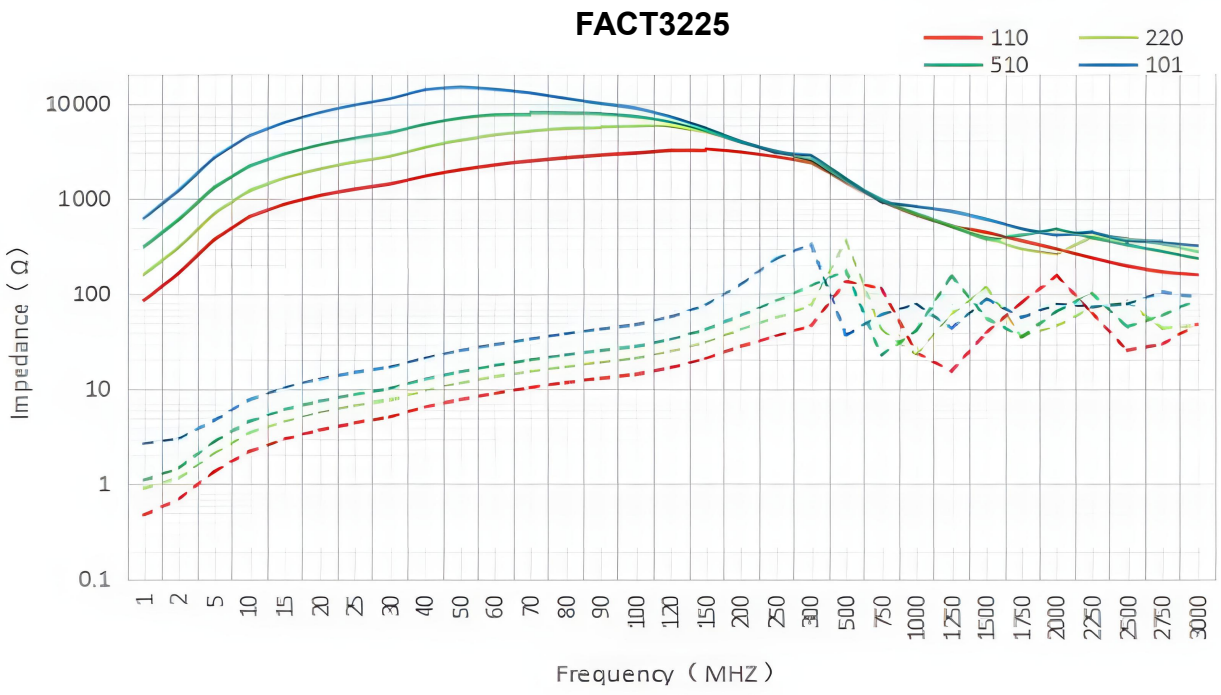

10.Reliability Test

Items	Requirements	Test Methods and Remarks
Operating life	1. No visible mechanical damage 2. Inductance change: Within±20% 3. Insulation resistance：10MΩ min	1. Reflow 2 times 2. temperature: 155± 2 ℃
Resistance to Soldering Heat	1. No visible mechanical damage 2. Inductance change: Within±20%	1. Solder on PCB to Reflow test Peak Temp. 260±5℃ 5～10 secs ,Cycles :2 times..Re-flowing Profile: Please refer to Fig-1 2. Test board thickness: 1.5mm 3. Test board material: glass epoxy resin 4. The specimen shall be stored at standard atmospheric conditions for 1 hour, after which the measurement shall be made.product showed no damage under microscope. **Fig-1** 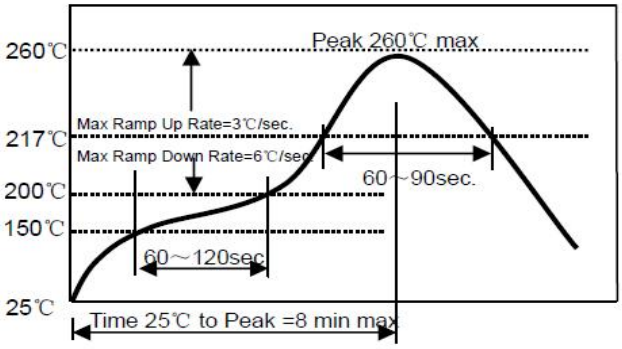
High Temperature	1. No visible mechanical damage 2. Inductance change: Within20%. 3. Insulation resistance：10MΩ min	1. Temperature: 125±2℃ 2. Duration: 1000 hours The specimen shall be stored at standard atmospheric conditions for 1 hour, after which the measurement shall be made.
Steady damp-heat	1. No visible mechanical damage 2. Inductance change: Within±20% 3. Insulation resistance：10MΩ min	1. Temperature:85℃ 2. Humidity: 85% RH 3. Duration:1000 hours 4. The specimen shall be stored at standard atmospheric conditions for 1 hour, after which the measurement shall be made.
Mechanical Vibration	1. No visible mechanical damage 2. Inductance change: Within±20%	1.Frequency: 10HZ～2000HZ/Min Cycles 2.Amplitude: 1.5 mm 3.Directions: X,Y,Z 4.Time: 2 hours in each directions (total of 6 hours)

Items	Requirements	Test Methods and Remarks
Thermal Shock	1.No visible mechanical damage 2.Inductance: Within ±20% 3.Insulation resistance：10MΩ min	1.Temperature and time: -40℃ for 30±3 min→105℃ for 30±3min, please refer to Fig-2 2.Transforming interval: Max. 3 Min 3.Tested cycle: 1000 cycles 4.The specimen shall be stored at standard atmospheric conditions for 1 hour, after which the measurement shall be made. 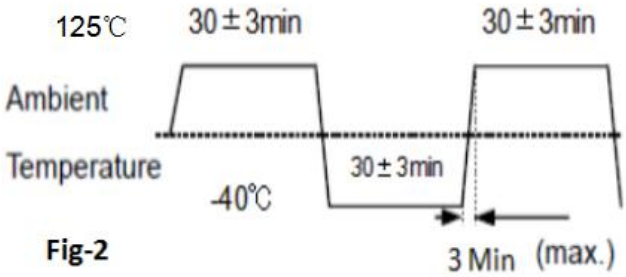 Fig-2
Salt Spray	1.No visible mechanical damage 2.Inductance change: Within ±20%	1. Salt concentration: (5 ± 1)% (mass percent) 2. pH value:6.5 - 7.2 3. temperature: 35 ± 2 ℃ 4. humidity: 85% 5. time: 24 hours 6. in normal temperature and humidity for 1 ～ 2 hours, testing inductance, the inductance value change can not be more than before test ± 10%.
Terminal strength	No visible mechanical damage	1. The electrode of the inductor is soldered to the PCB, to Fig-3 Then apply a force in the direction of the arrow. 2. 10N force. 3. Keep time: 10(±1)s The first three tests were OK, and the force was applied until the peak value of the product peeling. The test speed was set in the range of 3 ~ 8mm/min. Fig-3 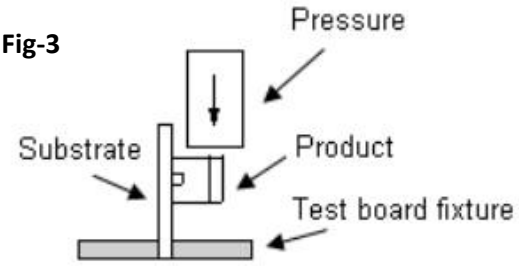

11.Packaging Information

1） Tape Packaging Dimensions（Unit：mm）

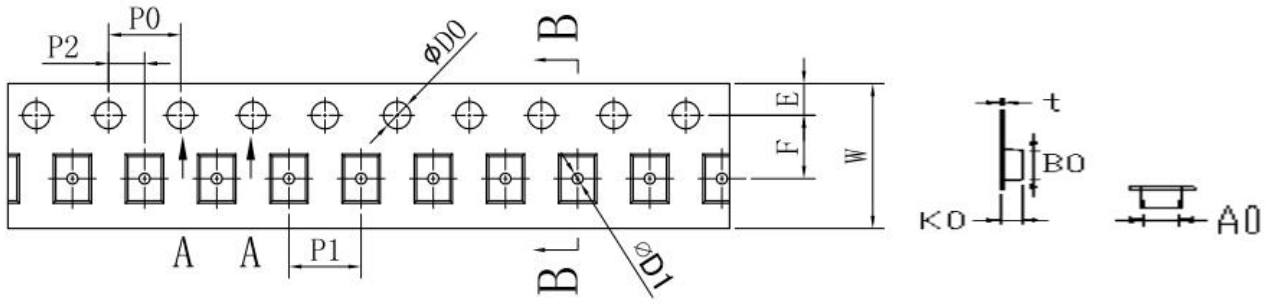

Type	W	P1	A0	B0	K0	t	E	F	P2	D0	D1	P0
FACT3225	8.00 ±0.10	4.00 ±0.10	2.85 ±0.10	3.65 ±0.10	2.55 ±0.10	0.26 ±0.05	1.75 ±0.10	3.50 ±0.10	2.00 ±0.10	1.55 ±0.05	0.60 ±0.05	4.00 ±0.10

2）Leader and blank portion

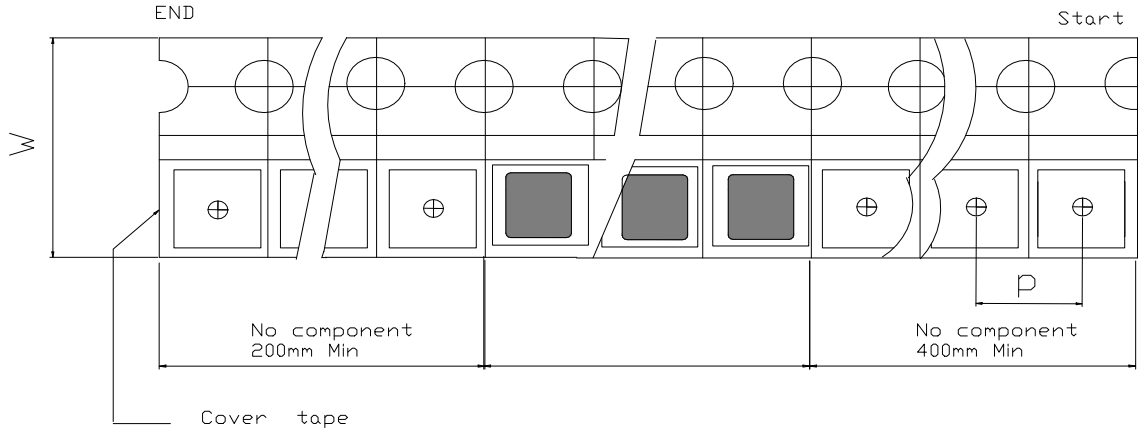

3）Taping Drawings

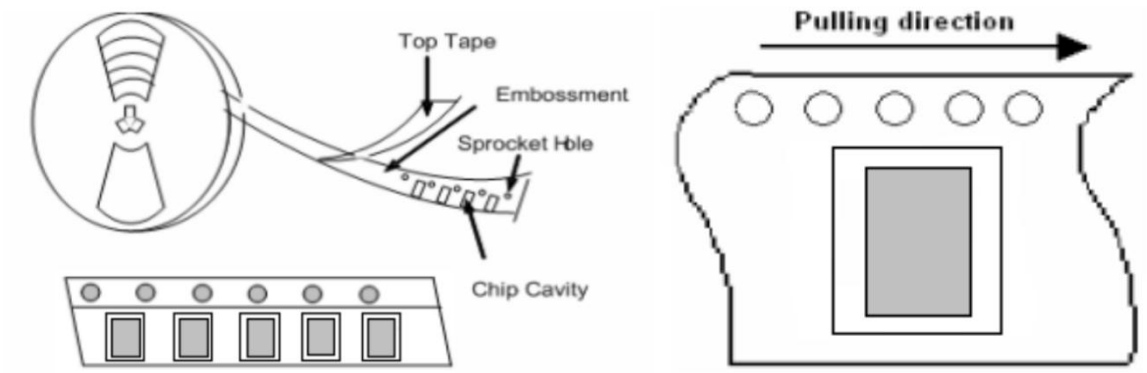

4）Reel Dimensions（Unit：mm）

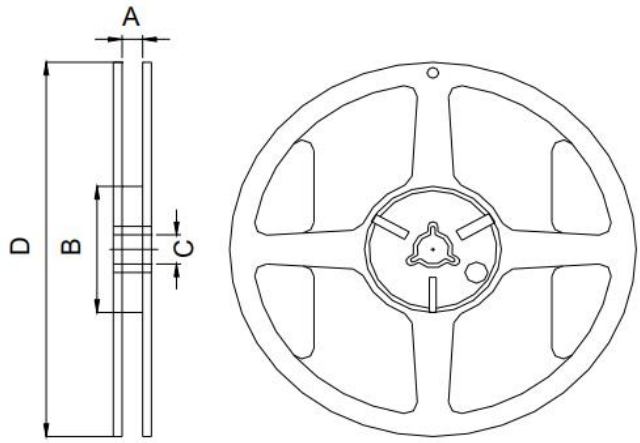

A(mm)	9.50±1.0
B(mm)	60.0±1.0
C(mm)	13.0±0.2
D(mm)	178.0±1.0

5）Packaging Quantity(PCS)

Type	Standard Quantity		
	Reel	Inner box	Carton box
FACT3225	1500 pcs / Reel	5Reel / box 7500 pcs)	10 Middle boxes, (75000 pcs)

6）Peel force of top cover tape

The peel speed shall be about 300mm/minute.

The peel force of top cover tape shall be between 10 to 100gf.

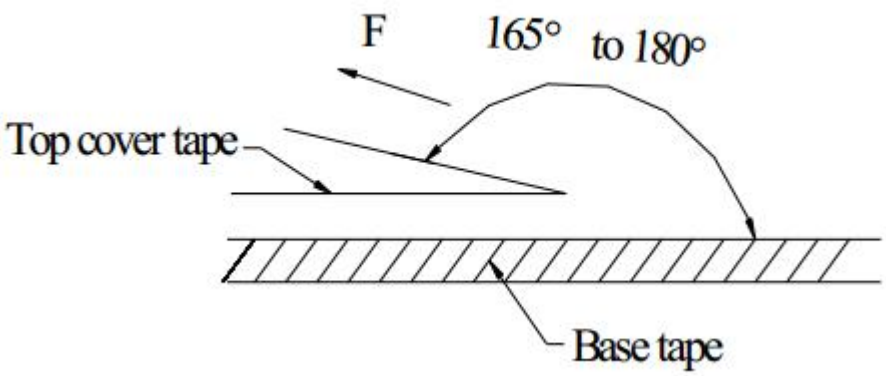

7）Reel Label

- Label on the reel
  - Customer's part Number
  - Lot Number
  - Quantity
  - date code

- Shipping Label
  - Customer's part Number
  - Manufacturer's part Number
  - Quantity
  - date code

8）Inner Box

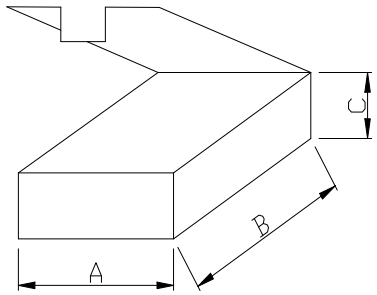

Packaging Type	A (mm)	B (mm)	C (mm)
Inner box	188	195	67

9）Carton

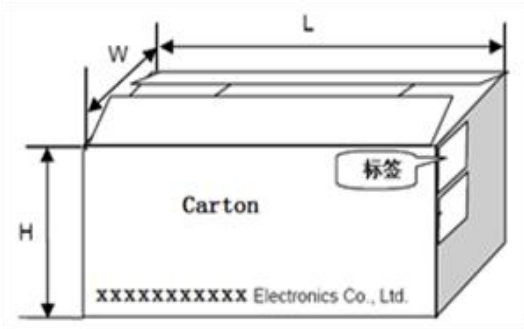

Packaging Type	L (mm)	W (mm)	H (mm)
Carton	390	350	215